GAMAK

شركة الأندلس التجارية
Al Andalos Trading Co

MD 100 L 4a

1-Phase 230 V 50 Hz

Duty Type	: S1
Degree of protection	: IP 55 (TEFC)
Insulation class	: F (155 °C)
Temp rise	: Class B (80K)
Mounting Design	: B3

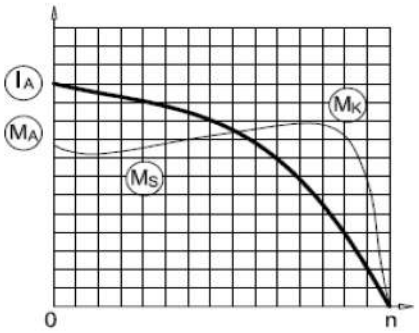

ELECTRICAL DESIGN

Rated output (kW)	: 2.2
Speed (rpm)	: 1425
Rated current (A)	: 13.4
Torque – Mn (Nm)	: 14.74
Permanent Capacitor 400V (µF)	: 60
Cos φ	: 0.93
Efficiency %	: 77.0
Moment of inertia J $(kgm)^2$	: 0.0044

Locked rotor Current – Ia (A)	: 54.94
Ia / In	: 4.1
Locked rotor Torque – Ma (Nm)	: 5.90
Ma / Mn	: 0.40
Breakdown Torque – Mk (Nm)	: 26.5
Mk / Mn	: 1.8

MECHANICAL DESIGN

Frame	: Aluminium
End shields	: Aluminium
Cooling fan	: Plastic
Terminal box	: Plastic
Cable gland	: Pg 16
No of cable glands	: 1

Bearing Arrangement

	Drive End	Non Drive End
Standard design	6206 ZZ	6206 ZZ

Paint	: RAL 7031- Grey
Approximate weight (kg)	: 21

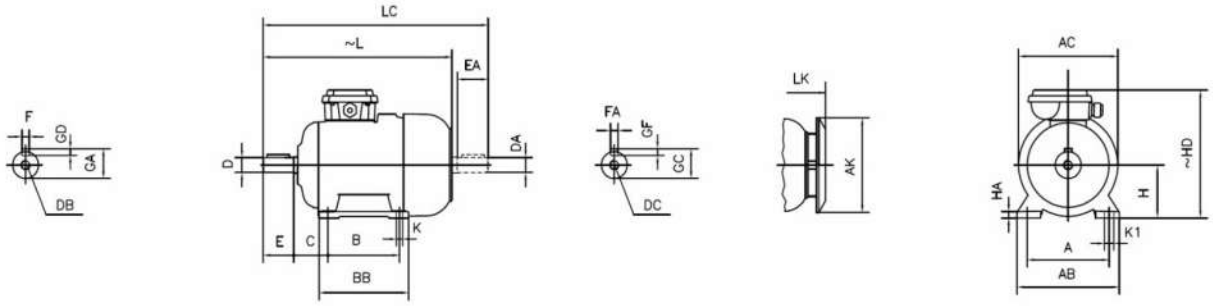

DIMENSIONS

FOOT MOUNTED MOTORS - B3, B6, B7, B8 B15, V5, V6

H	HD ~	HA	A	AB	AC Ø	AK Ø	K	K1	B	BB	L ~	LC	LK ~	C	E EA	DB DC	DØ DAØ	GA GC	FXGD FAXGF
100	259	13	160	200	194	188	12	18	140	175	375	441	410	63	60	M10	28	31	8X7

contact:
Mob:00201022621584/00201092425789
Email:info@andalos-trading.com
website:www.andalos-trading.com

Egypt-Giza-of October City
Lelat Alqader-Almaged Center